0 602 334 001

Issue / Stand 08-08-18

**Fig./Abb. 1**

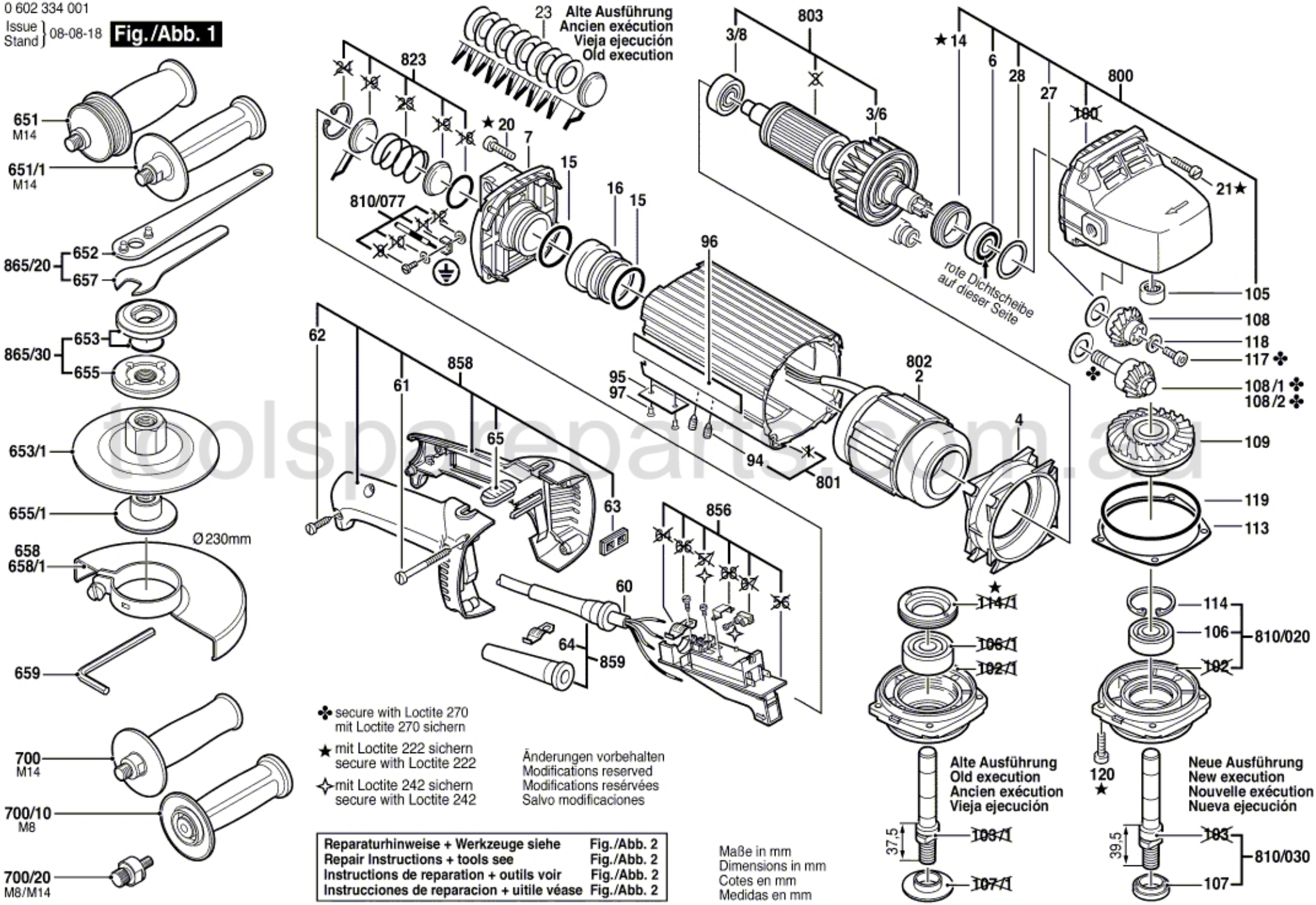


toolspareparts.com.au